Modeling of Foundry Processes: Differences Between Various Solutions

M. Gremaud
Calcom SA, PSE-Ecublens, Lausanne, Switzerland

M. Rappaz
Ecole Polytechnique Fédérale de Lausanne
Laboratoire de métallurgie physique, Lausanne, Switzerland

Abstract

In the field of modelling of solidification processes, there is much debate between the various numerical techniques used to solve the conservation equations. The arguments are very often based on the numerical technique itself (Finite Differences (FDM), Finite Volumes (FVM), Finite Elements (FEM), ...). This paper shows that, more than the numerical technique, the issue is related to the enmeshment used: *structured* or *unstructured* meshes. The advantages versus inconveniences of both enmeshment types are discussed in the present contribution.

INTRODUCTION

Modelling of foundry processes is taking an increasing importance for multiple reasons: process design and optimisation, cost and scrap reduction, quality assurance, etc. Thanks to the remarkable evolution of low cost computer capability, in-depth knowledge of physical phenomena and algorithms/numerical methods, the models are becoming increasingly complex and accurate. If foundrymen are very much aware of the know-how and skills required to produce a beautiful casting, they rarely know what is behind the "pretty pictures" produced on the computers. The purpose of this contribution is not to describe in details the physics and mathematics hidden in a simulation software: this will be too long and unnecessary. However, there are a few things that a foundryman or an engineer must know when he wants either to select or use efficiently a simulation software. If a beautiful casting at the surface can hide microporosity inside, pretty pictures can sometimes hinder severe numerical problems and false results. Therefore, this short paper should be viewed as a kind of metallographic sectioning of some of the numerical methods implemented in commercial softwares, without giving details on the etching preparation!

For several decades, there has been fights among scientists and engineers believing in one of the following "numerical religions": the Finite Element Method (FEM), the Finite Difference Method (FDM) and the Finite (or controlled) Volume Method (FVM)! The arguments to know which is the best method for producing quickly the most accurate simulation results are not always fairly presented in the literature, or even worse in the software documentation. This is one of the goal of the present contribution to show that this is not so much a question of the method which is involved, but rather a matter of the *enmeshment required to apply the method.* This will be detailed in Sections 3 and 4, whereas Section 2 first presents the minimum understanding of simulation required for the present discussion. A few examples will be given in Section 5 in order to clearly show the differences and implications associated with each method and enmeshment.

PRINCIPLES OF CONSERVATION EQUATIONS

Mr Lavoisier, a French chemist of the 17th century, used to say "Nothing is created, nothing is lost, everything is transformed"! The same rule still applies in the modelling of foundry processes. The phenomena behind the injection of a molten metal, its solidification and subsequent cooling are governed, at least at the macroscopic scale of the casting, by *conservation equations.* These equations state in particular that mass, velocity (in fact momentum), energy and solute elements are conserved during any process at any location and time within a component (or for any small volume element shown in Fig. 1). These equations must be complemented by appropriate *initial conditions* (where does the system start at the onset of the simulation) and *boundary conditions.* These later conditions are particularly important since it is not advised to model the entire Universe on a regular computer! Therefore, the interactions between the system which is modelled (for example the casting and the mould) and the rest of the World must be approximated by some factors (for example a heat transfer coefficient).

Because the domain which must be modelled has usually a very complex 3-dimensional (3D) shape and these conservation equations are usually non-linear, there is usually no analytical solution. Therefore, it is necessary to solve these equations on the computer. However, a computer has a limited space available in its memory (typically 128 to 512 Mbytes) (Mbyte allows to store about 125'000 real numbers) and its power is limited to about 10 to 100 millions multiplications per second. As the temperature or the velocity in a casting is typically a continuous function of space and time (we talk about

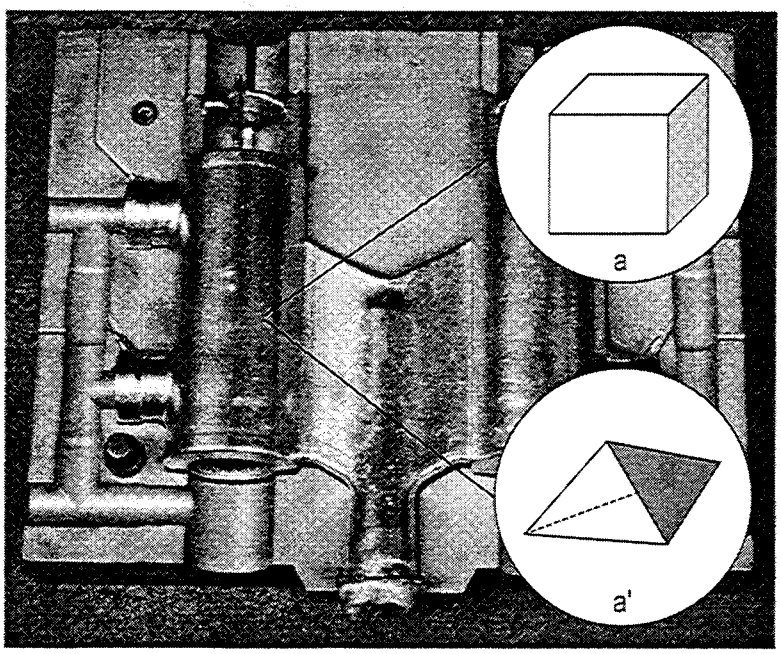

Figure 1: ***Casting part with typical small volume elements (a-b) used for the calculation of conserved entities. Structured meshes often produce a spatial discretisation made out of cubes or parallelepipeds while unstructured meshes are generally composed of tetrahedra.***

fields), it is necessary to limit these solutions to a certain number of points in the domain, called *mesh points*, and *time steps*. In other words, the continuous problem of finding the temperature or velocity at every point and time is replaced by a discrete problem. This transformation of the problem, which is necessary to make it tractable by a computer, induces some *errors*: the numerical solution which is obtained at the mesh points and time steps, cannot be as good as the exact solution. Providing all the physical parameters of the problem are known and accurate, the numerical error mainly depends on three factors: i) the spatial discretisation , ii) the time discretisation, and iii) the numerical algorithm itself.

In order to be clear, let consider a very simple example: the population of Switzerland (Fig. 2). If a geographer has suddenly the task of keeping track over time of the population of Switzerland, he will first need to make a "quick" count to know the initial condition. Then, he will simply count at the boundary the number of persons entering and leaving Switzerland, i.e., description of the flux of persons through the frontier (Fig. 2a). Of course, there will be inevitably persons "sink" (death) and "source" (birth) to be accounted for in the corresponding conservation equation describing this population! This will give an overall person balance at the scale of the whole country.

Now, one might want to know the evolution of the population within each of the four linguistic regions making Switzerland (Fig. 2b). The *mesh* describing the domain (country) will now include four control volumes and the fluxes of persons between each of them will be modelled, the overall flux in/out of Switzerland remaining the same. Finally, if the same count has to be made at the level of the 26 states of Switzerland (Fig. 2c), the mesh will be even finer and the knowledge of the status of Switzerland will be of course increased. In other words, knowing the heat flux at the surface of a casting gives its overall energy loss and average temperature, but a finer description of the actual temperature profile will require to enmesh the domain, the accuracy and the knowledge increasing with the fineness of the mesh.

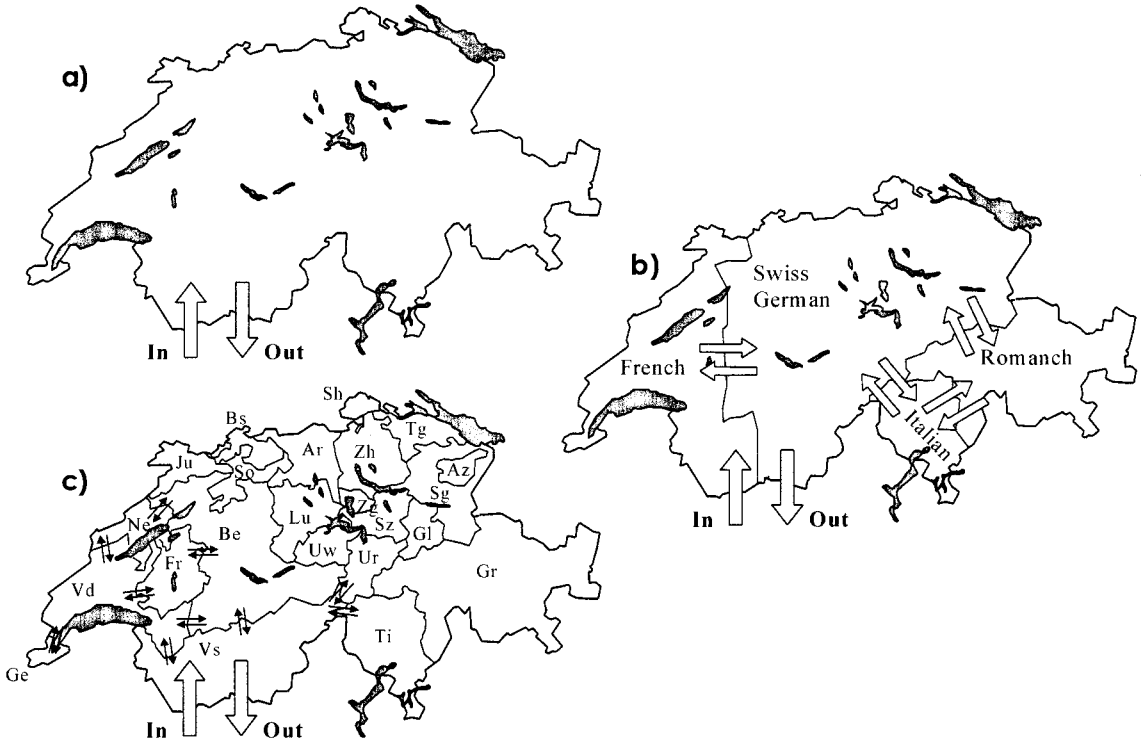

Figure 2 : ***Map of Switzerland (a) with its internal boundaries separating the four linguistic regions (b) and the 26 states (c).***

SPATIAL DISCRETISATION WITH STRUCTURED AND NON-STRUCTURED MESHES

As stated in the introduction, the fights between the various numerical techniques used to solve the conservation equations is essentially a matter of enmeshments. Two types of meshing must be distinguished: *structured* and *unstructured meshes*. In the first case, the domain is subdivided into a regular arrangement of parallelepipeds (rectangles in 2 dimensions) following some coordinate axes. Such a structured enmeshment of Switzerland is shown in Fig. 3a: the mesh is very easy to generate by simply drawing verticals and horizontals and by looking at intersections with the boundary. However, as can be seen, the shape of Switzerland is not very well described with a limited number of rectangles. The problem is even greater if one wants to follow finer details such as internal boundaries or small regions (states boundaries in Fig. 2c). The only solution available is to use a finer mesh in the regions where the details are fine. However, the inherent nature of structured meshes then propagates this fineness throughout the domain, thus creating an unnecessary large number of volume elements.

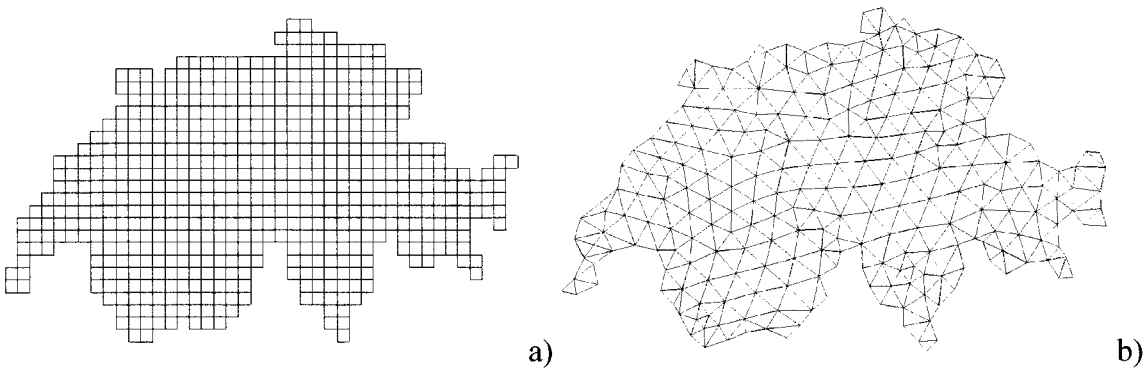

Figure 3: a) Structured (605 control volumes) and b) non-structured meshes of Switzerland (395 control volumes).

Unstructured meshes consist in a paving of the domain with tetrahedra (triangles in 2D), pentahedra and/or hexahedra (quadrangles in 2D) which are not necessarily regular. With a limited number of elements, the geometry can be accurately described as shown in Fig. 3b. The mesh is not necessarily uniform: it can be refined where necessary without propagating this fineness to the entire domain. The price to pay for this much better quality is that the generation of the mesh is more delicate: in 2D, one has for example to start from an enmeshment of the boundary with segments and then propagate triangles within the domain. However, in 3D, it is possible to find now on the market automatic enmeshers which generate an enmeshment with tetrahedra from a CAD file, with minimum efforts and time.

FEM as well as some FVM softwares are based on unstructured meshes and it can be shown that the resulting discrete equations are essentially the same. On the contrary, FDM and most FVM softwares use structured meshes and it can be shown again that the methods are essentially equivalent. As an example of a casting, Fig. 4 shows both a structured (a,c) and unstructured (b,d) partial enmeshments of two 3D components. The first ones (a,c) have millions control volumes and the surface is very much stair-case like, whereas the second ones (b,d) give much smoother surfaces with much less elements.

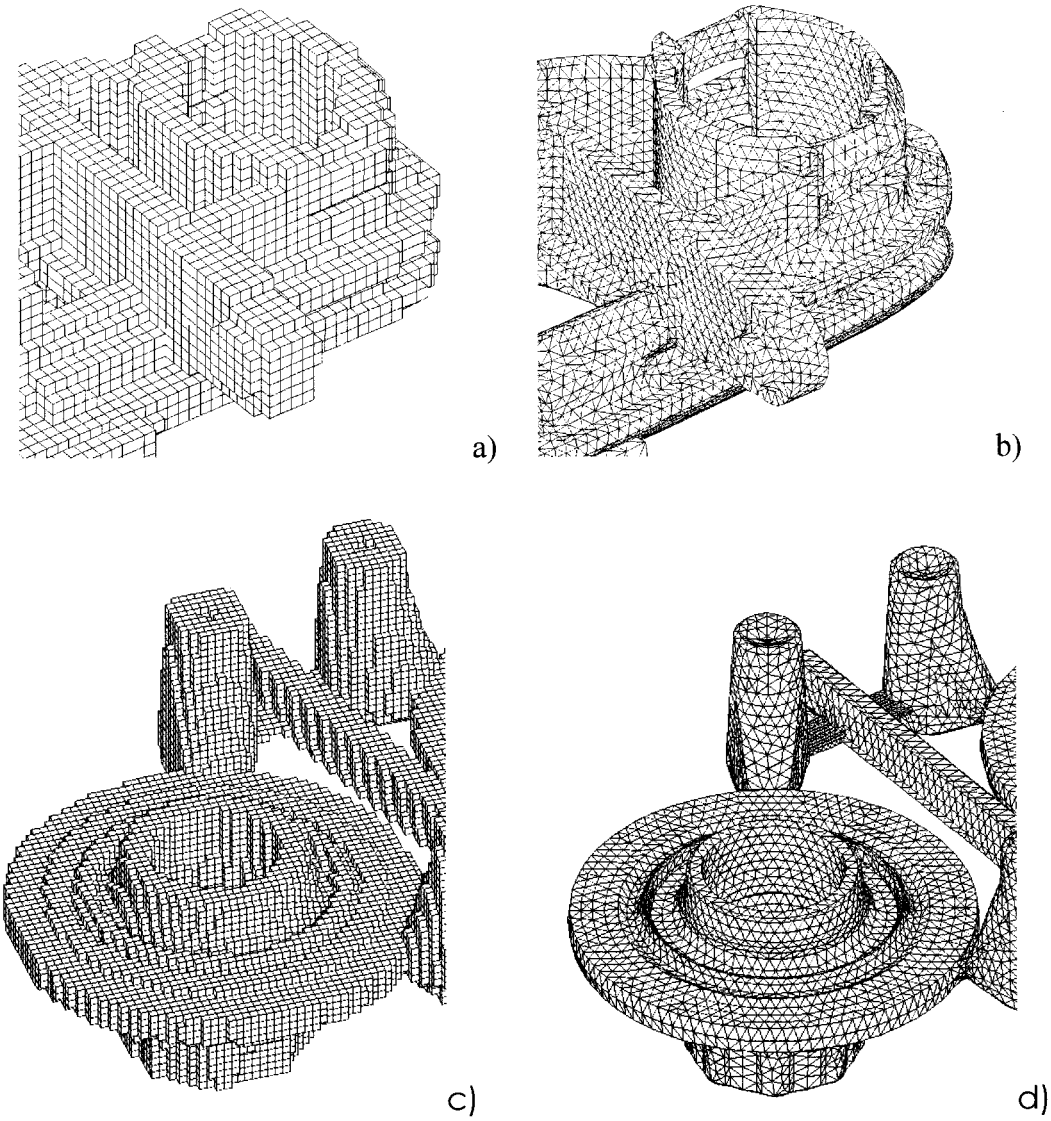

Figure 4: a-c) Structured and b-d) non-structured meshes of a typical casting.

WHAT DIFFERENCES DOES IT MAKE TO HAVE STRUCTURED OR UNSTRUCTURED MESHES ?

The difference between structured and unstructured meshes, rather than between FDM, FVM or FEM, is much more than the quality of the geometry description. The solution of the conservation equations is affected by the type of mesh used in the simulation and these points are briefly described below.

Convection calculation

For very simple geometry, it is well accepted that FVM based on structured meshes is more "robust" than FEM. The robustness of a software is the ability to find a numerical solution which ensures globally the conservation of the entities. This does mean that the solution is accurate and indeed it is more difficult to control false *numerical diffusion* with FVM. Numerical diffusion is an artifact introduced by the enmeshment and the discretisation of the equations: the fluid in the numerical solution appears more viscous than it should be or heat diffuses faster. With FEM, this problem can be controlled and limited to the streamline direction, i.e., false diffusion occurs then only in the direction of the convection currents but not transversely. This is an important aspect, especially for thin sections of a casting where the diffusion of heat across the section controls solidification.

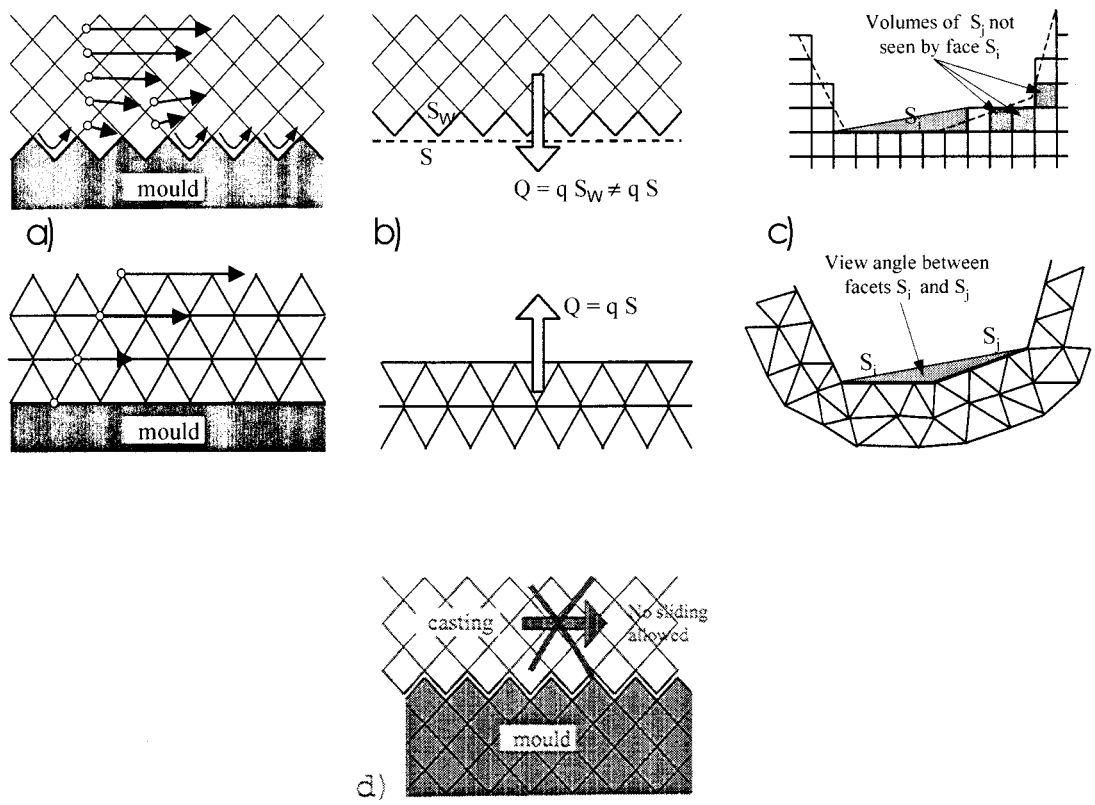

Figure 5: ***Some of the problems encountered with structured meshes for the solution of the equations governing convection (a), heat transfer (b), radiation (c) and deformation of the solid (d).***

For complex geometry, it has been shown that special care must be taken at the stepped boundaries if one wants to avoid again numerical diffusion. As schematically indicated in Fig. 5a, one can easily understand that water does not flow in the same manner on a smooth wall or on a stair-like surface. The contact of the fluid with the mould introduces as many small vortices in the current, which overall slow down the progression of the liquid: everything behaves as if the viscosity of the fluid was larger (i.e., numerical diffusion or numerical viscosity).

Heat flow and solidification calculations

The heat conservation equation is less difficult to tract than the equation governing the motion of a fluid. Therefore, it should be easier to ensure energy conservation and to minimise numerical diffusion, and such is the case for both structured and unstructured meshes. However, the main problem comes from the boundary conditions in this case. Assuming for example that a given heat flux is leaving a given portion of the surface of the domain, one has to ensure that the amount of heat is

indeed the product of the heat flow and of the actual area of the boundary. With an unstructured mesh (Fig. 5b), the surface is simply given by the sum of all the element surfaces through which heat is leaving since they follow the boundary. For a structured mesh, one has to account for the stairs present at the surface: if the surface is parallel to one of the coordinate axes (i.e., no stairs), the problem is trivial ; if it is inclined, the actual stepped surface is larger than the real one. A correction factor can be applied, but this is certainly not as accurate as for an unstructured mesh.

More difficult to handle with structured meshes is the situation of mutual radiation. This situation is particularly important at high temperature when furthermore no other heat exchange mechanism is present. Such is the case of investment casting of superalloys performed under vacuum: in this case, it is necessary to calculate how the various surfaces of the domain radiate toward each other and toward the outside world. For that purpose, *viewing factors* are introduced, which are difficult to calculate accurately with stepped surfaces (Fig. 5c).

Deformation

One of the important aspects of solidification modelling is related to the deformation of the solid upon cooling and the build-up of stresses. As is well known, all the deformation softwares available at present on the market are based on unstructured FEM meshes and the reasons is fairly simple to understand. Unlike convection in which the enmeshment is fixed and the velocity of the liquid is described at each nodal point, deformation must be performed on a mesh moving with the solid. This is necessary in particular to handle the loss of contact of two parts of a casting (e.g., the metal and the mould) when an air gap forms or the friction between them when they are in contact. Since structured meshes have to follow coordinate axes, they cannot move. Whereas, with unstructured meshes, the new position of the mesh points can be calculated at each time step, the mesh can be deformed, eventually rebuilt in the case of very large deformations, and the contact/loss of contact events can be detected. Even if "numerical tricks" are implemented in structured meshes, the problem of stepped interfaces cannot be handled: the basic problem is how to introduce friction or sliding between two stepped surfaces which look like gears (Fig. 5d) ?

What differences for casting applications ?

Although easier to do, structured meshes have clearly inherent numerical difficulties associated with stair-like surfaces. In some of the software based on structured meshes, numerical corrections are introduced to compensate for these difficulties (e.g., introduction of surface elements for fluid flow). But some others do not ! If a user usually checks the user-friendly interface and the facility of creating a mesh of software, he should also verify that the code he wants to purchase or he is currently using has solved these numerical issues. Below, we give a few examples based on two commercial software specifically sold for casting application, one based on FEM unstructured meshes and the other one using structured FVM grids.

Convection calculation

Mampaey and Xu [Modelling of Casting, Welding and Advanced Solidification Processes VII, The Minerals, Metals & Materials Society, 1995, 3-14] have examined the flow of liquid metals in a curved gating system behind a transparent window and have compared it with numerical results produced by two softwares, one based on unstructured meshes and the other one using structured meshes. Mampaey and Xu concluded that i) "orthogonal meshes which produce zigzag approximations seriously and adversely affect the simulation results in mould filling" and ii) "only a method based on a non-structured mesh is able to produce results which are in agreement with the experimental data." They put forward that the major reason for the discrepancy between observed filling patterns and simulated results obtained with the structured mesh is the artificial energy (or momentum) loss created by the numerous flow direction changes near the zigzagged surface of the curved gating system.

In order to illustrate the major drawback of structured meshes in mould filling calculations of complex geometry, the filling behaviour of a five-star part with a central pouring system has been computed (Fig. 6). For symmetry reasons, one can expect the same filling in each of the five branches. This is the case with the FEM calculation (Fig. 6a) : the liquid reaches the end of each branch of the star at about the same time and then backslashes in the opposite direction towards the pouring system. In full agreement with Mampaey and Xu's conclusions, such is not the case with a zigzagged geometry of a structured mesh (fig. 6b).. In the bottom left branch, the only one having a smooth surface, liquid metal does reach the extremity first and then flows back, as in the FEM simulation. However, in the four other branches which exhibit a zigzagged surface, the flow has an artificially increased viscosity and this has several consequences : i) the transverse section of these four branches is filled before the metal reaches the end ; ii) liquid reaches last the end of these branches ; iii) the filling time is different for each branch ; iv) the entrapment of bubbles and possible oxide skins cannot be predicted. Knowing that most real casting parts have surfaces which are rarely aligned with the main coordinate axes, it can be concluded that structured meshes and associated zigzagged surfaces induce false numerical viscosity, unless specific surface elements are introduced.

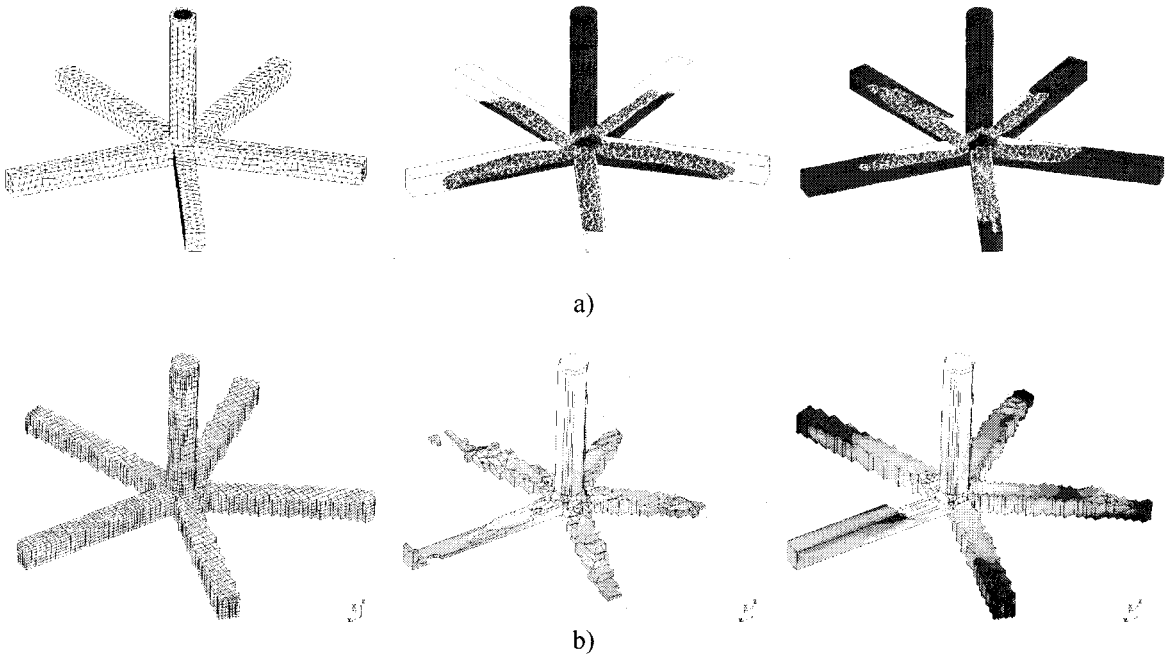

Figure 6: ***Filling of a five-star part as calculated with FEM unstructured (a) and FVM structured software (b).***

Heat flow and solidification calculations

The stairs present at the surface of a part may also have a drastic effect on its solidification behaviour if special care is not taken. A zigzagged boundary has an artificially increased effective surface through which heat exchange is taking place . For example in 2D, a boundary at 45 degrees with respect to the axes has a zigzagged surface which is increased with respect to the smoothed one. A correction factor, which depends on the surface orientation with respect to the coordinate axes, must be applied in order to model correctly the heat loss at such boundary. As shown in the following example, this correction is apparently not done or is not applied rigorously in some of the commercial software based on structured meshes. Figure 7 shows the solidification sequence of two metallic cubes cooling down in a sand mould (for visualisation purposes, the mould is not represented). Both cubes are perfectly identical in size, they are made out of the same material and they are placed in the same mould. As a consequence, they should solidify in the same way. The only difference among the cubes is the following one: the right cube is perfectly aligned with the mesh, i.e., its faces are smoothed, while the left cube is rotated with respect to the main axes, i.e., its faces are made of stair-like elements. The solidification behaviour of the right cube is in agreement with foundry practice, i.e., its corners and edges cool first. On the contrary, the solidification behaviour of the left cube is strongly affected by the mesh. One can observe that face (A) with the largest number of stairs solidifies more rapidly than face (B) which has less stairs. This shows that if no precaution is taken, a heat flow computation based on structured meshes can give substantial differences between two identical cubes or even worse, between two faces of the same cube.

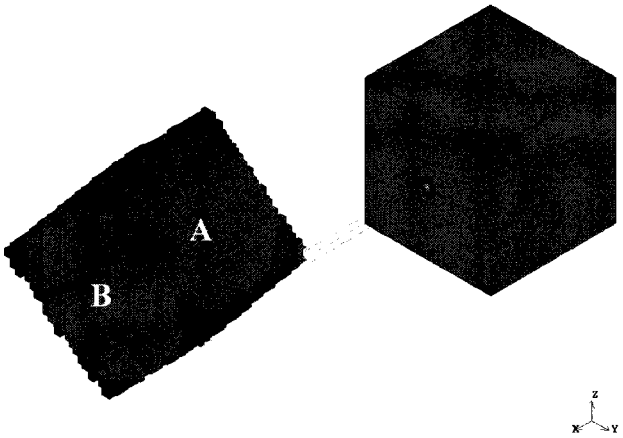

Figure 7: Solidification of two cubes with FVM structured meshes: The mesh is aligned with the cube (right), the mesh is not aligned with the cube (left).

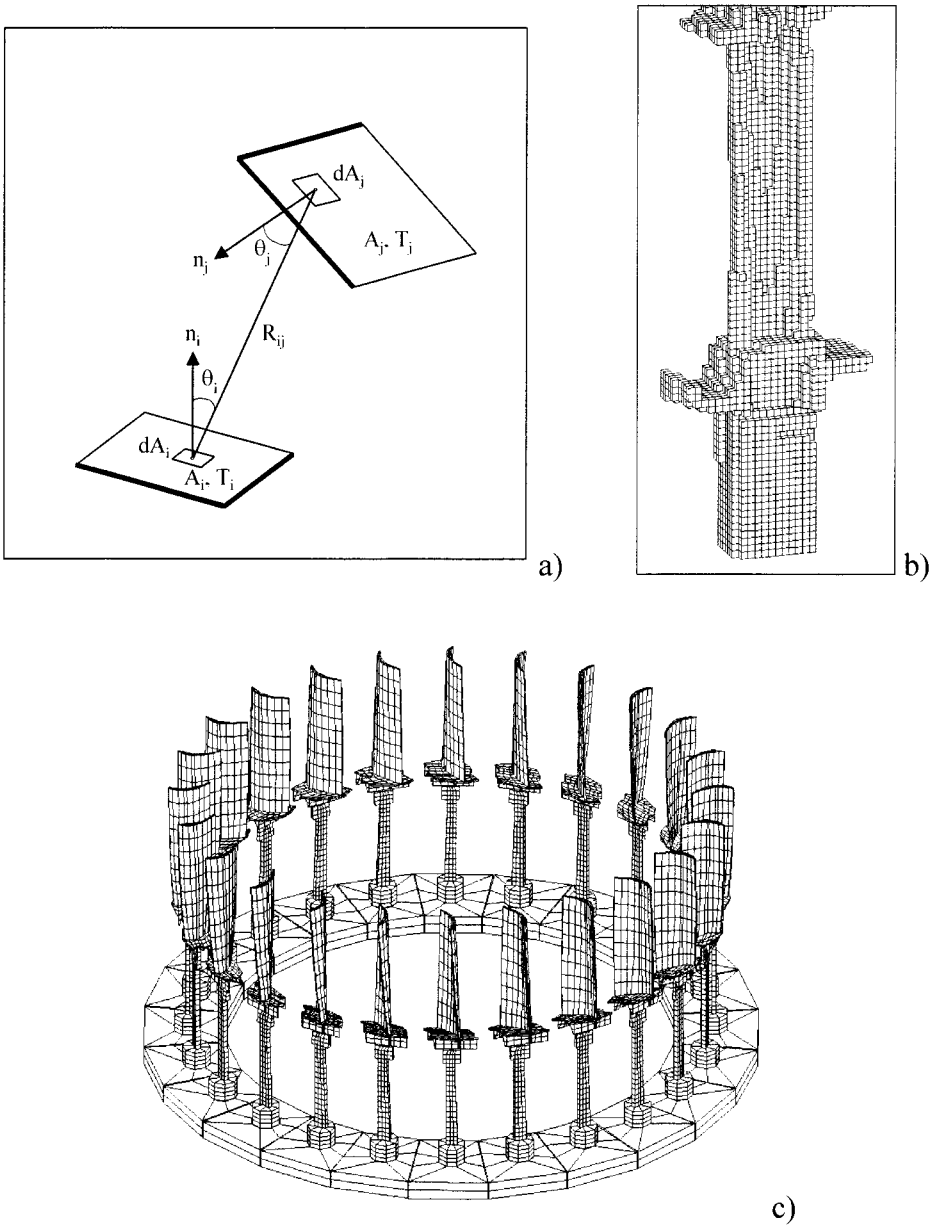

Figure 8: ***Radiation issues associated with structured and non-structured meshes.***

Radiation exchange between surfaces depends strongly on the surface geometry and configuration, as well as on their radiation properties and temperatures. As suggested in Section 4, the calculation of view factors is essential to model this type of heat transfer, and this becomes crucial for investment casting of aerospace components (Fig. 8). The view factor between two facets is defined as the fraction of radiation leaving a surface and intercepted by another (Fig. 8a). With a structured mesh of a turbine blade(Fig. 8b), one can understand that view factors are difficult to estimate, especially when a cluster of blades (Fig. 8c) is considered. A situation like that illustrated in Fig. 8c can only be modelled accurately using unstructured meshes having smooth surfaces.

Deformation

The Finite Element Method, based on unstructured meshes, has its roots in mechanical engineering and all major software for the simulation of stress and deformation are using today this method. Since structured meshes are constrained to follow the coordinate axes, deformation calculations with such meshes are limited to small deformations, often in the elastic regime. As is well known, deformation of metals during cooling occurs to a large extent in the viscoplastic regime and this component must be absolutely considered if realistic simulations are to be obtained. Furthermore, the problem of stair-like interfaces for handling sliding/friction has already been mentioned (see Fig. 5d). Figure 9 shows some applications of stress calculations in castings obtained with non-structured meshes and FEM. Fig. 9a shows the butt curl in DC casting of Al alloys: at some stage, the ingot looses contact with the bottom block (lower part of Fig. 9a) and as a consequence heat exchanges are concentrated

on the central part of the bottom block. Fig. 9b and 9c show stress developments in shape castings. It can be observed in Fig 9c that an air gap has formed between the part and the mould, thus influencing heat transfers at this boundary. Finally, Fig. 9d represents the deformation (amplified by a factor 100) of a wheel produced by high pressure casting.

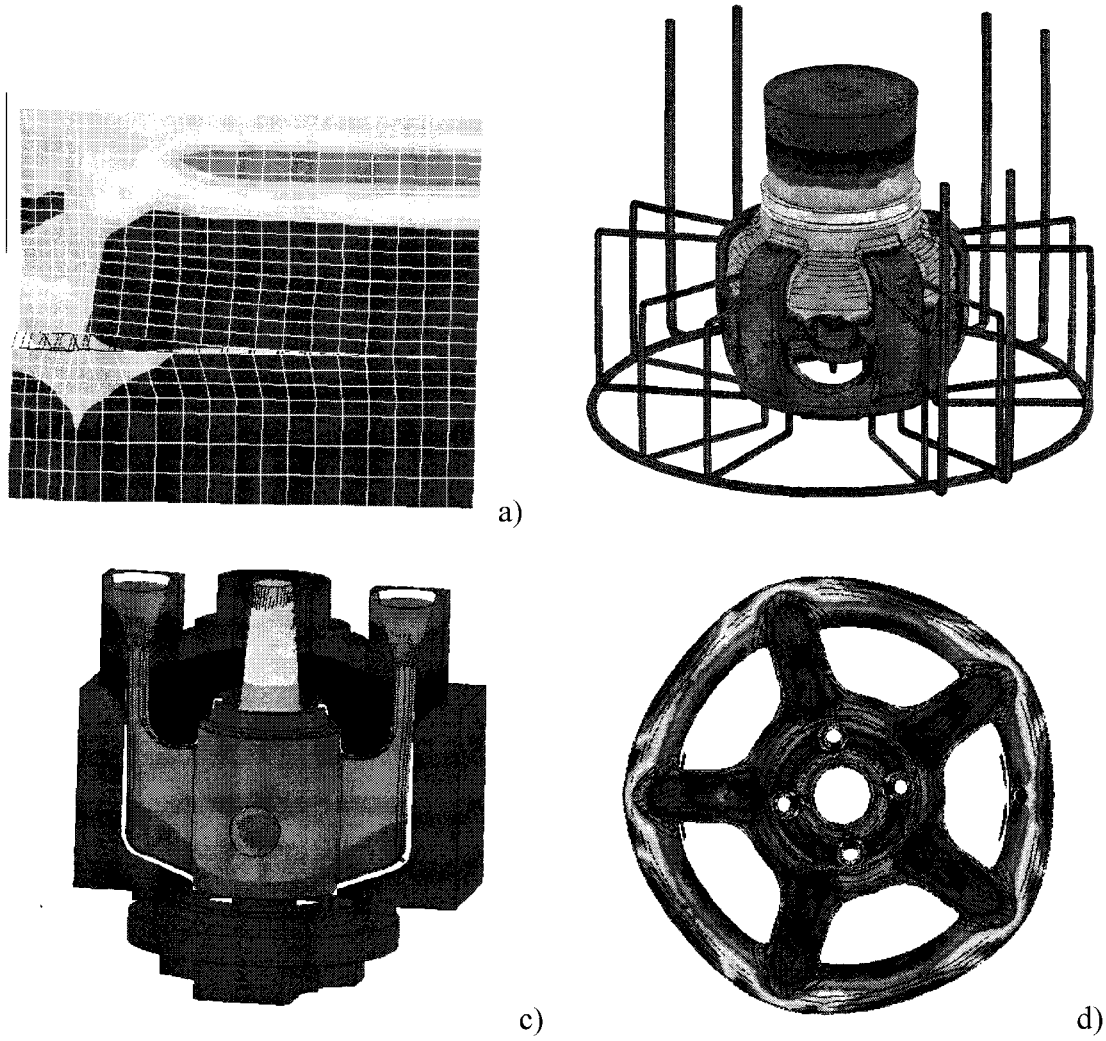

Figure 9: ***Stress and deformation results obtained with non-structured meshes.***

Other issues

In terms of calculation times, it would be incorrect to compare FEM and FDM/FVM on the basis of the mesh size only. Indeed, structured meshed require a very large number of elements (maybe 10 millions) to represent a complex geometry (with still with stair-like surfaces), but the method being simpler, a calculation can ran as fast as a computation using FEM and half a million nodes. However, in terms of visualisation potentialities, computer storage place and post-processing capacities, the reduced number of elements in unstructured meshes is a clear advantage over structured ones. This asset is important in the daily usage of a software. Figure 10 represents a computer screen spliced into four parts allowing to visualise a part with four different views: this is possible in a reasonable time with an unstructured mesh because the post-treatment of the hardware has to manage a reasonable amount of data, while the same feature would be too slow with a structured mesh.

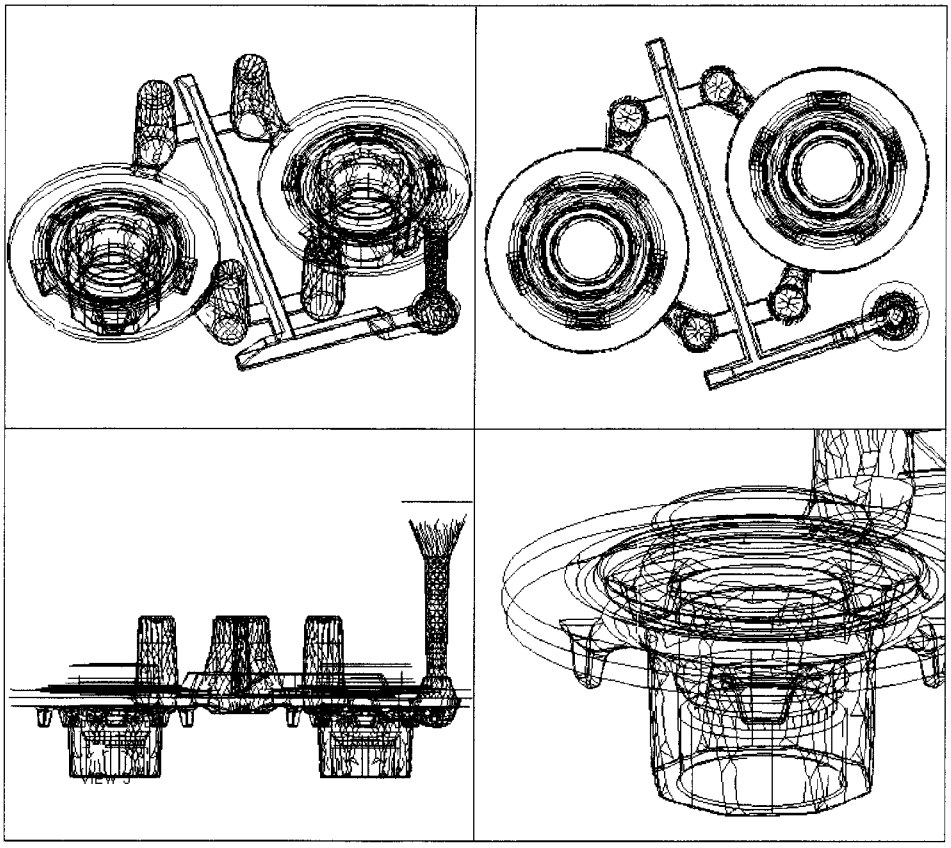

Figure 10: ***Post-processing potentialities allowed by non-structured meshes.***

Unstructured meshes and FEM offer further advantages such as a *locally refined mesh* (Fig. 11 a), *non-coincident mesh* (Fig. 11b), both techniques allowing to selectively place elements where they are really needed. In the examples of Figure 11, the mesh density in the parts is high, where flow, thermal, microstructure, porosity and stress calculations are especially important, and reduced in the mould. Furthermore, *mesh deformation capacities* (Fig. 12 a), i.e., the possibility to deform a mesh and eventually to rebuild it in the case of large deformation, and *adaptive meshing* (Fig. 12 b-c), i.e., the possibility of refining locally and dynamically the mesh in the regions of particular interest (e.g., in regions where the temperature or the solute changes rapidly) are important advantages of non-structured meshes.

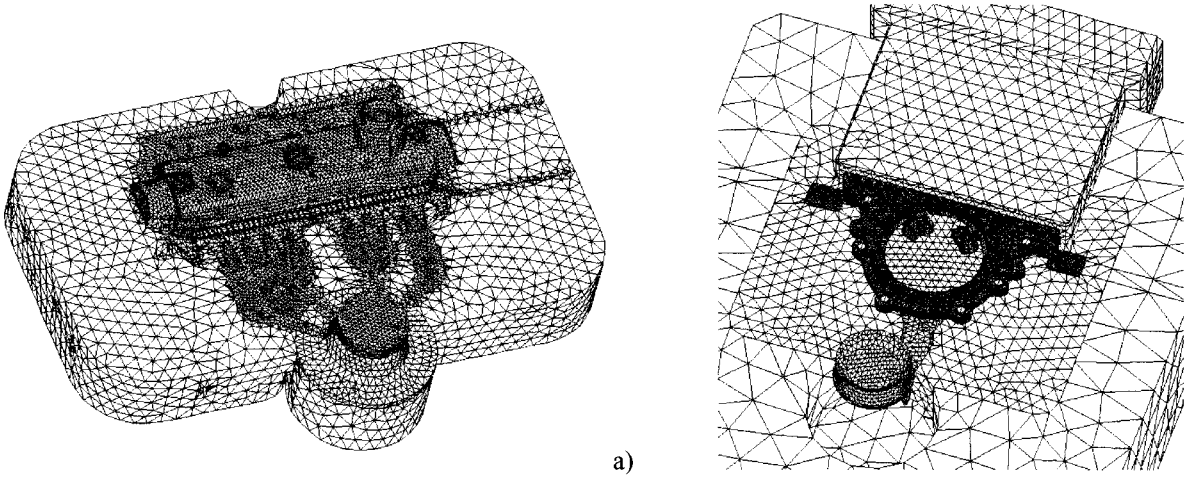

a) b)

Figure 11 : ***Meshing possibilities offered by unstructured meshes: a) locally refined meshes and b) non-coincident meshes.***

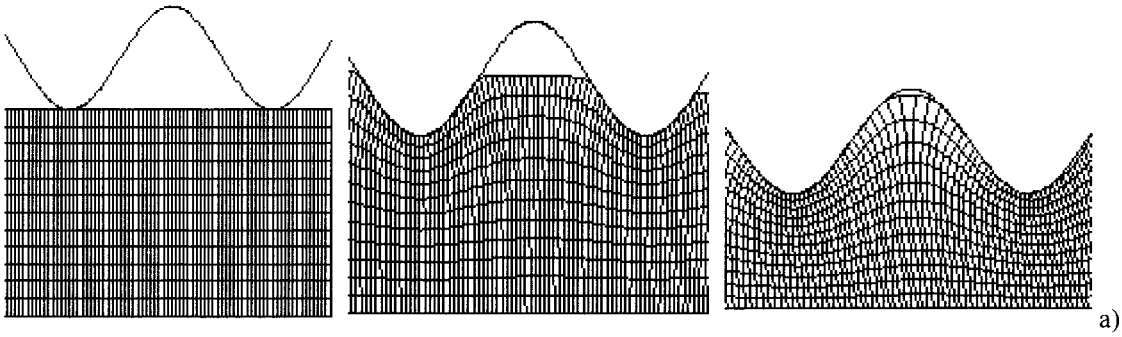

a)

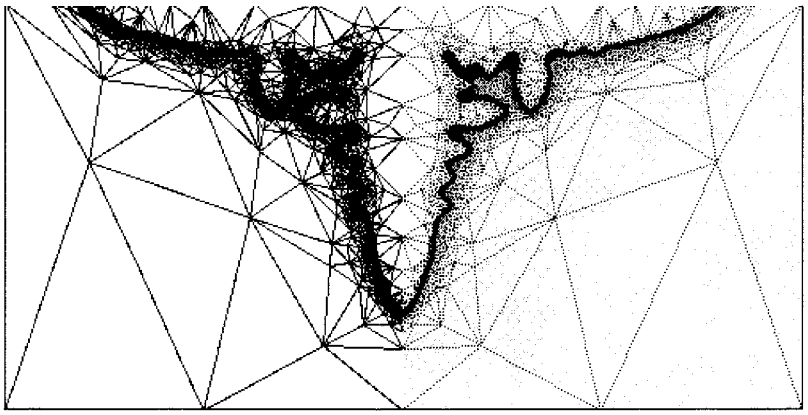

b)

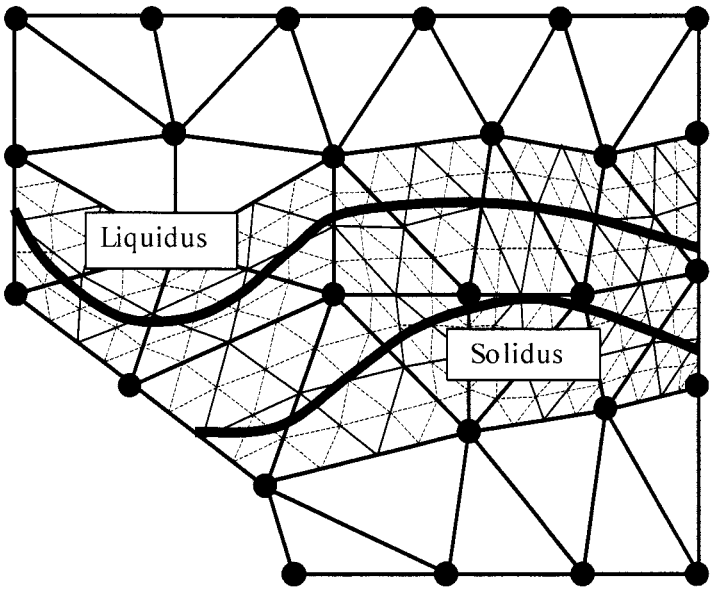

c)

Figure 12: ***Other facilities offered by non-structured meshes: a) Evolutive meshes b) Adaptive meshing c) Multi-grid meshes.***

CONCLUSION

For many years, the shape casting industry has relied on software based on structured meshes for the modelling of solidification due to the facility to create such meshes, even for complex geometry. However, it has been shown in this contribution that such rigid spatial discretisation presents several limitations as compared with unstructured meshes. Nowadays, powerful enmeshers, which are furthermore integrated in all CAD systems, are capable of producing automatically complex unstructured meshes. The present authors believe that the advent of these enmeshers combined with the clear advantages of unstructured meshes will position software based on these techniques at the leading edge of casting simulation.